THIS DRAWING IS UNPUBLISHED. RELEASED FOR PUBLICATION -,- .
© COPYRIGHT - By - ALL RIGHTS RESERVED.

LOC	DIST
AD	00

REVISIONS

P	LTR	DESCRIPTION	DATE	DWN	APVD
	B2	REVISED PER ECO-11-005033	28MAR11	RK	HMR

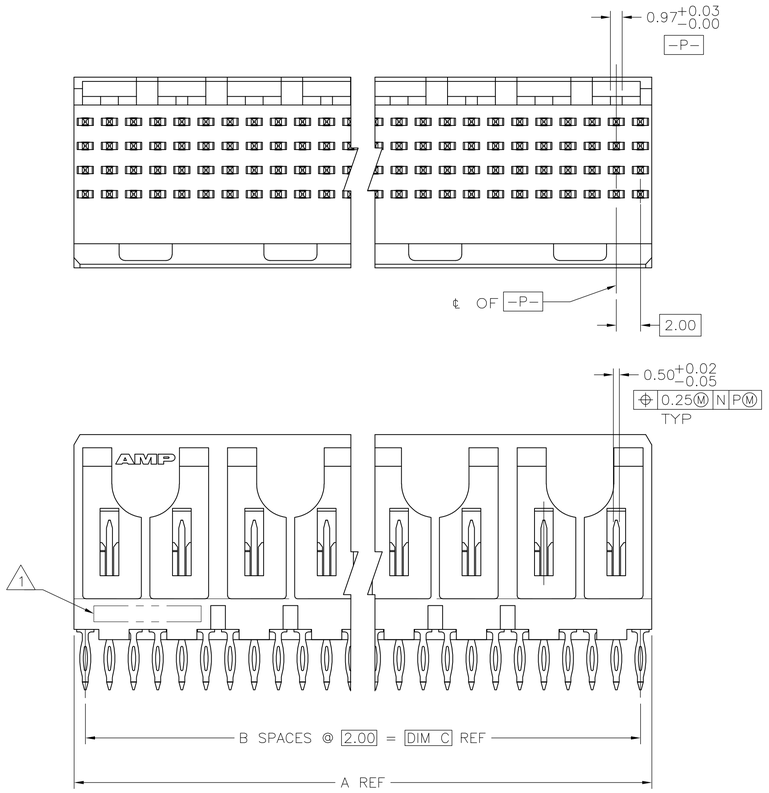

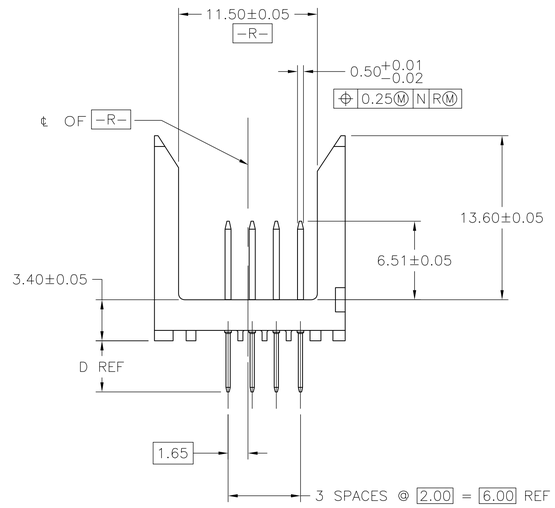

1. HOUSING MATERIAL: LIQUID CRYSTAL POLYMER PER ASTM D5138 LCP000 G30A 32250, COLOR: NATURAL.
2. CONTACT MATERIAL: PHOSPHOR BRONZE.
3. CONTACT FINISH:
   UNDERPLATE (ENTIRE CONTACT):
   0.00127 MIN NICKEL PER SAE-AMS-QQ-N-290.
   ON MATING SURFACES:
   CONFORMS TO ALL TESTING SPECIFIED FOR TELCORDIA UNCONTROLLED ENVIRONMENT.
   ON LEADS
   0.0006 MIN TIN PER ASTM B 545 OVER UNDERPLATE.
   LUBRICATION (MIN MATING SURFACES):
   SURFACE CONDITIONER AFTER PLATING.
4. PART MARKING, LOCATED APPROXIMATELY AS SHOWN.
5. DIMENSION APPLIES WHEN SEATED ON PRINTED CIRCUIT BOARD.
6. CONTACT FINISH:
   UNDERPLATE (ENTIRE CONTACT):
   0.00127 MIN NICKEL PER SAE-AMS-QQ-N-290.
   ON MATING SURFACES:
   0.00076 MIN NICKEL OR COBALT HARDENED GOLD PER ASTM B-488 OVER UNDERPLATE.
   ON LEADS
   0.0006 MIN TIN PER ASTM B 545 OVER UNDERPLATE.
   LUBRICATION (MIN MATING SURFACES):
   SURFACE CONDITIONER AFTER PLATING.

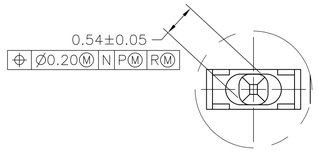

DETAIL Z
SCALE 20:1

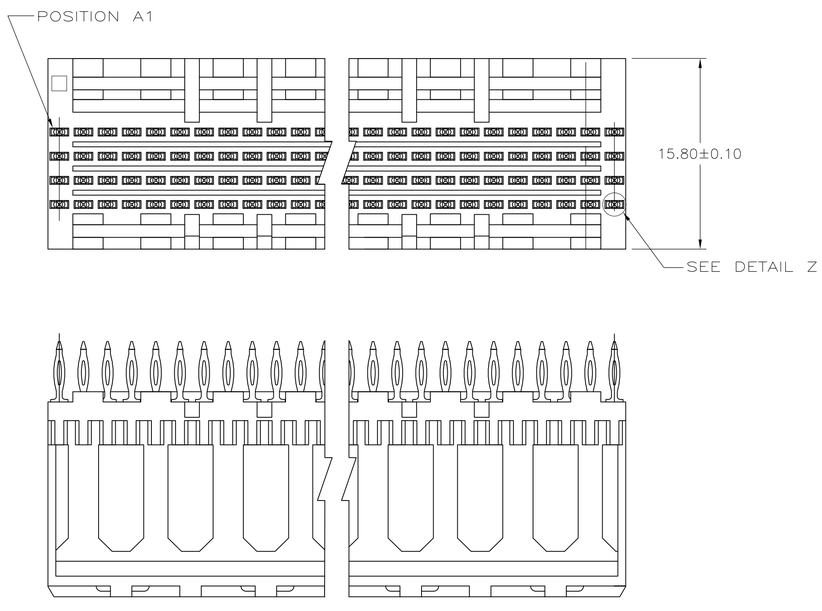

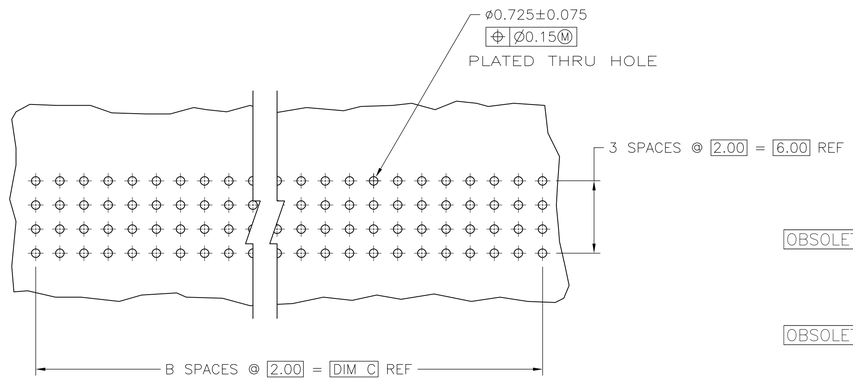

RECOMMENDED CIRCUIT PATTERN
PER IPC-D300 TYPE II, CLASS C
(COMPONENT SIDE)

	D	C	B	A	FINISH	NO OF POSN	PART NUMBER
	4.25	46	23	47.88	6	96	3-5536504-3
	4.25	22	11	23.88	6	48	3-5536504-2
	4.25	10	5	11.88	6	24	3-5536504-1
OBSOLETE	4.25	34	17	35.88	3	72	1-5536504-2
	4.25	130	65	131.88	3	264	1-5536504-1
	4.25	106	53	107.88	3	216	1-5536504-0
	4.25	118	59	119.88	3	240	5536504-9
	4.25	70	35	71.88	3	144	5536504-8
OBSOLETE	4.25	66	33	67.88	3	136	5536504-7
	4.25	58	29	59.88	3	120	5536504-6
	4.25	82	41	83.88	3	168	5536504-5
	4.25	94	47	95.88	3	192	5536504-4
	4.25	46	23	47.88	3	96	5536504-3
	4.25	22	11	23.88	3	48	5536504-2
	4.25	10	5	11.88	3	24	5536504-1

THIS DRAWING IS A CONTROLLED DOCUMENT.

DIMENSIONS: mm

TOLERANCES UNLESS OTHERWISE SPECIFIED:
0 PLC ± –
1 PLC ± –
2 PLC ± .13
3 PLC ± –
4 PLC ± –
ANGLES ± –

MATERIAL 1 2
FINISH 3 6

DWN B. MCMASTER 30AUG04
CHK R. WERTZ 30AUG04
APVD R. WERTZ 30AUG04
PRODUCT SPEC —
APPLICATION SPEC —
WEIGHT —

TE Connectivity

NAME PIN ASSEMBLY, SIGNAL MODULE, Z-PACK 2mm FB, 2mm

SIZE	CAGE CODE	DRAWING NO	RESTRICTED TO
A1	00779	C-5536504	—

CUSTOMER DRAWING | SCALE 4:1 | SHEET 1 OF 1 | REV B2

4805 (3/11)